K. K. Wagh Institute of Engineering Education and Research, Nashik

(An Autonomous Institute from A. Y. 2022-23)

End-Sem Examination - Winter 2024

Paper Solution

Academic Year: 2024-25	**Semester: I**
Name of Programme: FY B.Tech.	**Pattern: 2023**
Name of Course: Fundamentals of Electronics Engg.	**Course Code: 2300107A**
Max. Marks: 60	**Duration: 2:30 Hrs**

Q. No.	Details	Max. Marks	CO No.	BT Level
Q.1	With the help of a neat circuit diagram and waveforms, explain the working of a half wave rectifier with capacitor input filter. (6 marks) **Solution:** A half-wave rectifier with a capacitor-input filter is shown in below. The filter is simply a capacitor connected from the rectifier output to ground. R_L represents the equivalent resistance of a load. 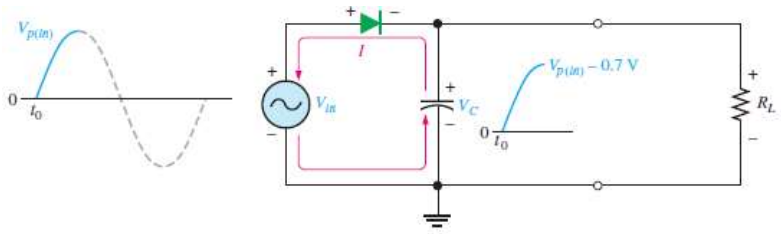 (a) Initial charging of the capacitor (diode is forward-biased) happens only once when power is turned on. 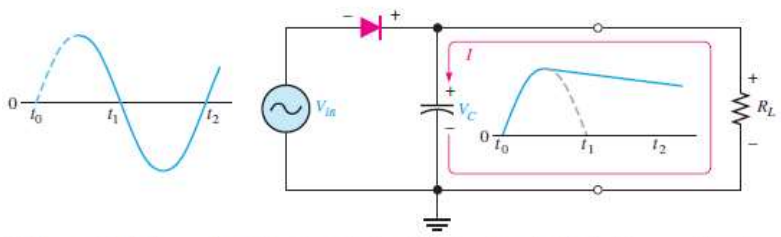 (b) The capacitor discharges through R_L after peak of positive alternation when the diode is reverse-biased. This discharging occurs during the portion of the input voltage indicated by the solid dark blue curve. 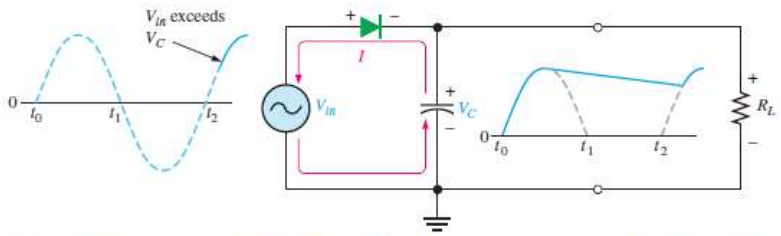 (c) The capacitor charges back to peak of input when the diode becomes forward-biased. This charging occurs during the portion of the input voltage indicated by the solid dark blue curve.	[6]	CO3	L3

	During the positive first quarter-cycle of the input, the diode is forward-biased, allowing the capacitor to charge to within 0.7 V of the input peak Figure(a).When the input begins to decrease below its peak, as shown in part (b), the capacitor retains its charge and the diode becomes reverse-biased because the cathode is more positive than the anode. During the remaining part of the cycle, the capacitor can discharge only through the load resistance at a rate determined by the R_LC time constant, which is normally long compared to the period of the input. The larger the time constant, the less the capacitor will discharge. During the first quarter of the next cycle, as illustrated in part (c),the diode will again become forward-biased when the input voltage exceeds the capacitor voltage by approximately 0.7 V. 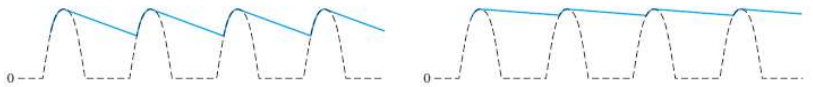 (a) Larger ripple (blue) means less effective filtering. (b) Smaller ripple means more effective filtering. Generally, the larger the capacitor value, the smaller the ripple for the same input and load.			
Q.2	How the BJT can be used as a switch? Explain. (6 marks) **Solution:** 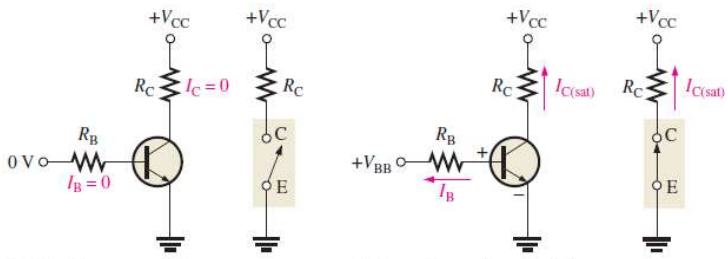 (a) Cutoff — open switch (b) Saturation — closed switch Fig: Switching action of a BJT The basic operation of a BJT as a switching device. In part (a), the transistor is in the cut-off region because the Base-Emitter junction is not forward biased. In this condition, there is an open between Collector and Emitter, as indicated by the switch equivalent. In part (b), the transistor is in the saturation region because the Base-Emitter junction and the Base-Collector junction are forward biased and the Base current is made large enough to cause the Collector current to reach its saturation value. In this condition, there is a short between Collector and Emitter, as indicated by the switch equivalent. Actually, a small voltage	[6]	CO3	L3

	drop across the transistor of up to a few tenths of a volt normally occurs, which is the saturation voltage, V_{CE}(sat). The conditions in cut-off and saturation.			
Q.3	a) Explain the following OpAmp parameters with their ideal and practical values: i) Slew rate ii) Bandwidth (5 marks) **Solution:** **i) Slew rate:** It is the maximum rate of change of the output voltage of an OpAmp with respect to time. $$s = \frac{dVo}{dt} \mid max$$ Ideal value of slew rate should be infinity while its practical vale for OpAmp IC 741 is 0.5 V/µs. **ii) Bandwidth:** It the range of signal frequencies that can be applied to OpAmp as input so that there will not be distortions in any output. It is the operating frequency range of the OpAmp. Ideal value of bandwidth should be infinity while its practical vale for OpAmp IC 741 is 1 MHz. **OR** b) Explain the following OpAmp parameters with their ideal and practical values: i) Input Impedance ii) Output Impedance (5 marks) **Solution:** **i) Input impedance:** It is the impedance observed between two input terminals of an OpAmp. The input impedance of the OpAmp should be infinite to avoid the loading effect. Its practical value is 2 MΩ for OpAmp IC 741. **ii) Output impedance:** It is the impedance observed at output side of an OpAmp. The output impedance of the OpAmp should be zero to avoid the loading effect. Its practical value is 75 Ω for OpAmp IC 741.	[16]	CO1	L2

	c) Derive the expression for the voltage gain of an OpAmp based inverting amplifier. (5 marks) **Solution:** 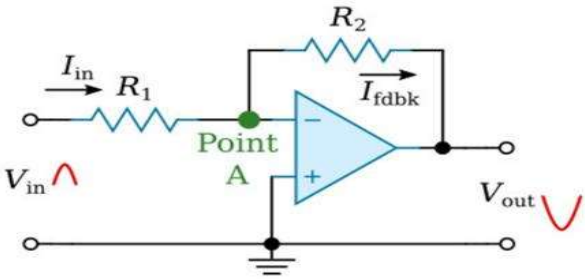 According to virtual ground concept, $V_A = 0$ Here, $I_{in} = \frac{V_{in} - V_A}{R_1} = \frac{V_{in}}{R_1}$ and $I_{fdbk} = \frac{V_A - V_{out}}{R_2} = \frac{-V_{out}}{R_2}$ As input bias current in OpAmp is ideally zero, $I_{in} = I_{fdbk}$ $\frac{V_{in}}{R_1} = \frac{-V_{out}}{R_2}$ $Voltage\ Gain = \frac{V_{out}}{V_{in}} = \frac{-R_2}{R_1}$ **OR**		CO3	L3
	d) For non inverting amplifier using Op-Amp, if Rf= 15 kΩ, R1= 1 kΩ, V_{CC}= ±15V, Vi= 2V dc i) Calculate output voltage ii) Is the result in part (i) practically possible? Justify. (5 marks) **Solution:** For non inverting amplifier, $V_{out} = \left(1 + \frac{R_2}{R_1}\right) V_{in}$ If Vin = 2 Vdc then $V_{out} = \left(1 + \frac{R_2}{R_1}\right) V_{in}$			

$$V_{out} = \left(1 + \frac{15k}{1k}\right) 2$$
$$V_{out} = 32\ Vdc$$

But

$$V_{sat} = 0.9\ V_{CC} = 0.9 * 15 = 13.5\ V$$

As the output voltage is greater than the saturation level, the OpAmp output will be saturated and the practical output in this case will be +13.5 Vdc.

e) Design an OpAmp based circuit to convert sine wave to square wave without phase shift between input and output. (6 marks)

Solution:

It is an OpAmp based comparator in which reference voltage is zero and input signal is sine wave. As there is no phase shift between input and output, it is a non inverting comparator with zero reference voltage in which sine wave input is applied at non inverting input terminal while fixed zero reference voltage is applied at inverting input terminal.

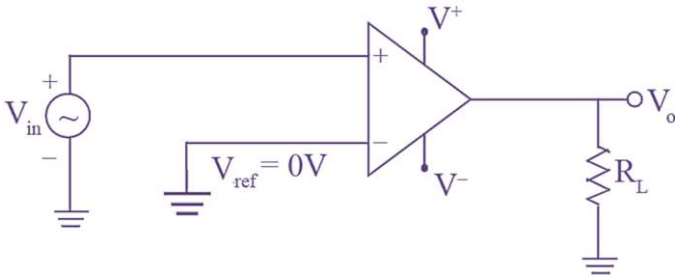

As comparator is an open loop application of the OpAmp, its output is always +Vsat or –Vsat. In a non inverting comparator, if input is greater than reference then output is +Vsat and if input is less than reference then output is –Vsat.

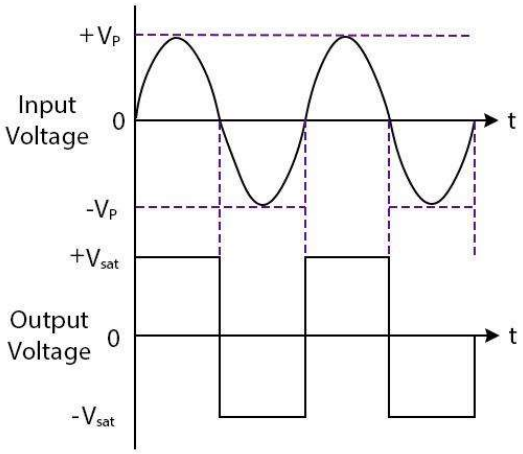

CO3 L3

OR

f) Design an OpAmp circuit for which output is inverted average of two inputs. (6 marks)

Solution:

The proposed OpAmp circuit is shown below. It is inverting summing amplifier with two inputs V_{IN1} and V_{IN2}.

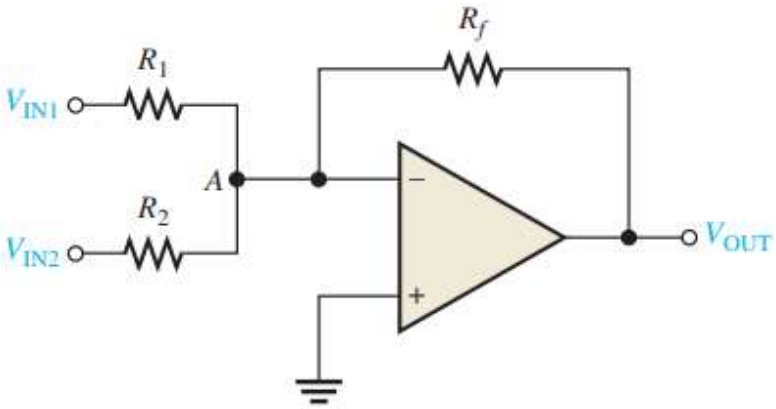

Let us assume that the current flowing through feedback resistor R_f is I_T. As the input bias current is zero, I_T will be divided into two parts I_1 and I_2. The current I_1 will flow through R_1 and I_2 will flow through R_2.

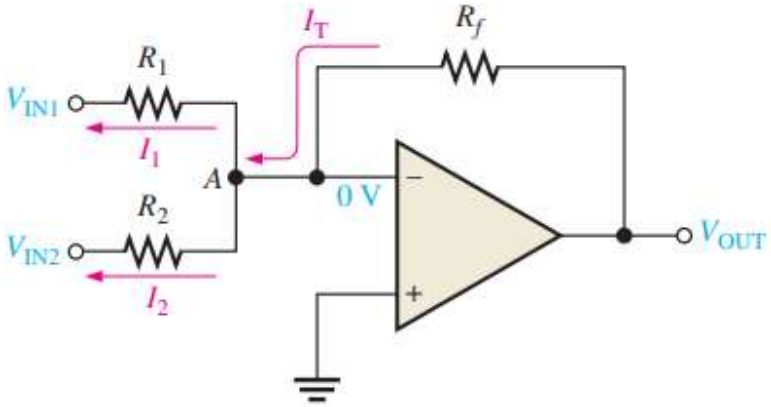

According to virtual ground concept,

$$V_A = 0$$

Here,

$$I_1 = \frac{V_A - V_{IN1}}{R_1} = -\frac{V_{IN1}}{R_1}$$

and

$$I_2 = \frac{V_A - V_{IN2}}{R_2} = -\frac{V_{IN2}}{R_2}$$

and

$$I_T = \frac{V_{OUT} - V_A}{R_f} = \frac{V_{OUT}}{R_f}$$

As input bias current in OpAmp is ideally zero,

$$I_T = I_1 + I_2$$

$$\frac{V_{OUT}}{R_f} = -\frac{V_{IN1}}{R_1} - \frac{V_{IN2}}{R_2}$$

$$V_{OUT} = -R_f\left(\frac{V_{IN1}}{R_1} + \frac{V_{IN2}}{R_2}\right)$$

If

$$R_1 = R_2 = 2R_f$$

Then

$$V_{OUT} = -\left(\frac{V_{IN1} + V_{IN2}}{2}\right)$$

Thus, the output is inverted average of two inputs.

Q.4 [16] CO2 L2

a)

1) Draw the symbol and truth table of 3 input EX-OR gate. Write its logic expression. (3 marks)

Solution:

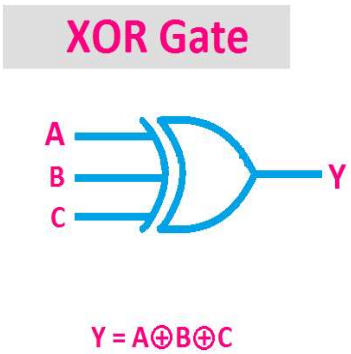

INPUT			OUTPUT
A	B	C	(Y)
0	0	0	0
0	0	1	1
0	1	0	1
0	1	1	0
1	0	0	1
1	0	1	0
1	1	0	0
1	1	1	1

2) Convert $(E2F1)_{16}$ to octal. (2 marks)

Solution:

$(E2F1)_{16} = (1110001011110001)_2 = (161361)_8$

OR

b)

1) Draw the symbol and truth table of 3 input EX-NOR gate. Write its logic expression. (3 marks)

Solution:

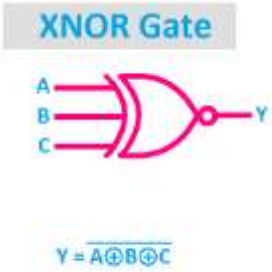

INPUT			OUTPUT
A	B	C	(Y)
0	0	0	1
0	0	1	0
0	1	0	0
0	1	1	1
1	0	0	0
1	0	1	1
1	1	0	1
1	1	1	0

2) Convert $(1F6E)_{16}$ to octal. (2 marks)

Solution:

$(1F6E)_{16} = (1111101101110)_2 = (17556)_8$

c) Prove $\bar{A}BC + A\bar{B}C + AB\bar{C} + ABC = AB + BC + AC$ (5 marks)

Solution:

$$LHS = \bar{A}BC + A\bar{B}C + AB\bar{C} + ABC$$
$$LHS = \bar{A}BC + A\bar{B}C + AB(\bar{C} + C)$$

$Since\ \bar{C} + C = 1$

$$LHS = \bar{A}BC + A\bar{B}C + AB$$

$Since\ C + 1 = 1$

$$LHS = \bar{A}BC + A\bar{B}C + AB(C + 1)$$
$$LHS = \bar{A}BC + A\bar{B}C + ABC + AB$$
$$LHS = \bar{A}BC + AC(\bar{B} + B) + AB$$

$Since\ \bar{B} + B = 1$

$$LHS = \bar{A}BC + AC + AB$$

$Since\ B + 1 = 1$

$$LHS = \bar{A}BC + AC(B + 1) + AB$$
$$LHS = \bar{A}BC + ABC + AC + AB$$
$$LHS = BC(\bar{A} + A) + AC + AB$$

$Since\ \bar{A} + A = 1$

$$LHS = BC + AC + AB$$
$$LHS = AB + BC + AC = RHS$$

OR

CO4 L3

d) Implement OR gate and EX-OR gate using NAND gates only. (5 marks)

Solution:

OR gate implementation using NAND gates:

Logic expression of OR gate is

$$Y = A + B$$

Taking double inversion,

$$Y = \overline{\overline{A + B}}$$

Using DeMorgan's theorem,

$$Y = \overline{\bar{A}.\bar{B}}$$

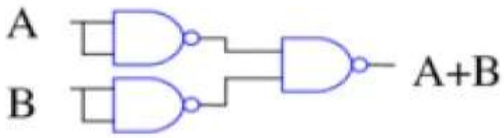

EX-OR gate implementation using NAND gates:

Logic expression of EX-OR gate is

$$Y = A \oplus B$$

$$Y = A.\bar{B} + \bar{A}.B$$

Taking double inversion,

$$Y = \overline{\overline{A.\bar{B} + \bar{A}.B}}$$

Using DeMorgan's theorem,

$$Y = \overline{\overline{(A.\bar{B})}.\overline{(\bar{A}.B)}}$$

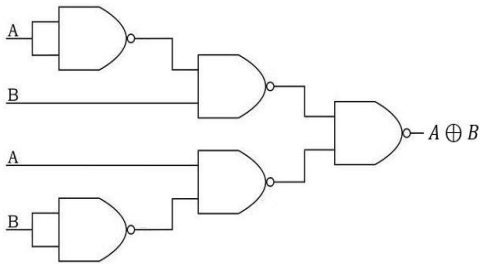

e) Draw NAND gate implementation of the SR flip-flop and explain its working. (6 marks) CO4 L3

Solution:

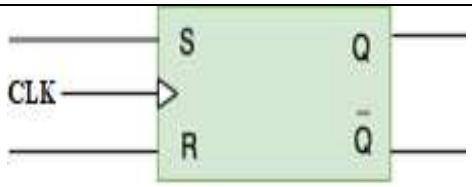

It is a flip-flop with two inputs, one is S and other is R. Here S stands for Set and R stands for Reset. Set basically indicates setting the flip-flop which means output 1 and reset indicates resetting the flip flop which means output 0. Here clock pulse is supplied to operate this flip flop hence it is clocked flip flop.

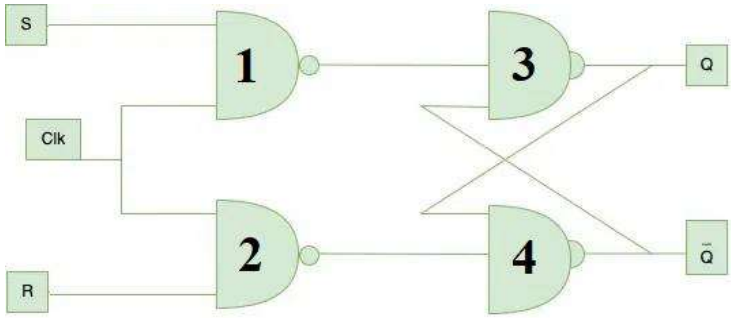

Case 1 (Hold state):
If S=0 and R=0,outputs of both gate-1 and gate-2 will be 1. The values of Q and Q' will be same as their previous values.

Case 2 (Reset state):
For S=0 and R=1, if the clock pulse is applied (i.e. CLK=1),the output of gate-1 becomes 1; whereas the output of gate-2 will be 0. The 0 at the input of gate-4 forces the output to be 1 (i.e. Q'=1).This 1 goes to the input of gate-3 to make both the inputs of gate-3 as 1, which forces the output of gate-3 to be 0 (i.e. Q=0).

Case 3 (Set state):
For S=1 and R=0, if the clock pulse is applied (i.e. CLK=1), the output of gate-2 becomes 1; whereas the output of gate-1 will be 0. The 0 at the input of gate-3 forces the output to be 1 (i.e. Q=1). This 1 goes to the input of gate-4 to make both the inputs of gate-4 as 1, which forces the output of gate-4 to be 0 (i.e. Q'=0).

Case 4 (Invalid state)
For S=1 and R=1, if the clock pulse is applied (i.e. CLK=1), the outputs of both gate-1 and gate-2 becomes 0. The 0 at the input of both gate-3 and gate-4 forces the outputs of both the gates to be 1 (i.e. Q=1 and Q'=1) which is invalid.

S	R	Qn+1	State
0	0	Qn	Hold
0	1	0	Reset
1	0	1	Set
1	1	X	Invalid

OR

f) Draw NAND gate implementation of the JK flip-flop and explain its working. (6 marks)

Solution:

The JK flip-flop is a sequential logic circuit that can store one bit of binary information. It is a modification of the SR flip-flop with some added features that make it more versatile. The JK flip-flop is a type of edge-triggered flip-flop, which means that its output changes only when a clock pulse is applied to its clock input.

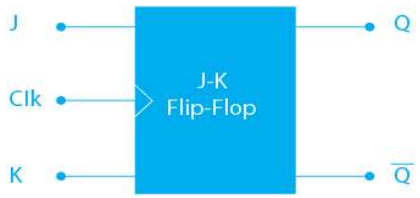

The JK flip-flop consists of two inputs J (set) and K (reset), a clock input and two outputs denoted as Q and Q'. Here the clock input is used to trigger the flip-flop and change its state. Q is the main output of the JK Flip Flop and Q' is the complement of the output Q.

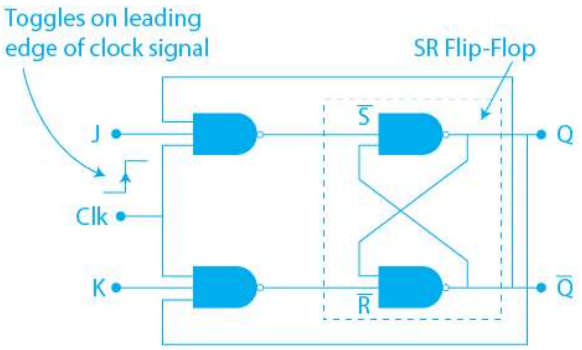

When J and K are both low (0), the output of the flip-flop remains the same as its previous state. When K is high (1) and J is low (0), the output of the flip-flop is reset to 0. When J is high (1) and K is low (0), the output of the flip-flop is set to 1. When both J and K

are high (1), the output of the flip-flop toggles between its current state and its complement.

Clock	J	K	Qn+1	State
0	X	X	Qn	
1	0	0	Qn	Hold
1	0	1	0	Reset
1	1	1	1	Set
1	1	1	Qn	Toggle

Q.5 a) Compare AM and FM. (5 marks) [16] CO2 L2

Solution:

Amplitude Modulation	**Frequency Modulation**
Variation in amplitude in accordance with carrier signal	Variation of frequency in accordance with carrier signal
Frequency and phase kept constant	Amplitude and phase kept constant
Less noise immunity	Less noise immunity
Poor sound quality	Better sound quality
Less complex compared to FM	It is more complex.
Bandwidth is less	Bandwidth is large
Power is wasted during transmission.	It is highly efficient as all power is utilized.

OR

b) Explain simplex and duplex modes of transmission. (5 marks)

Solution:

Simplex Mode:

- Transmission is unidirectional.
- Device can either send signal or it can receive.
- Eg. TV broadcasting, Remote control, Keyboard input to PC

Half Duplex Mode:

- Transmission is bidirectional.
- Both devices can send or receive signal.
- But at a time, a device can either send signal or receive it.
- Eg. Amateur radio / HAM radio, Web browsing, Citizens band radio

	Full Duplex Mode: • Transmission is bidirectional. • Both devices can send or receive signal. • Device can send or receive signal simultaneously. • Eg. Telephone communication, Data transfer over ethernet, Cellular communication			
	c) Explain the block diagram of communication system. (5 marks) **Solution:** 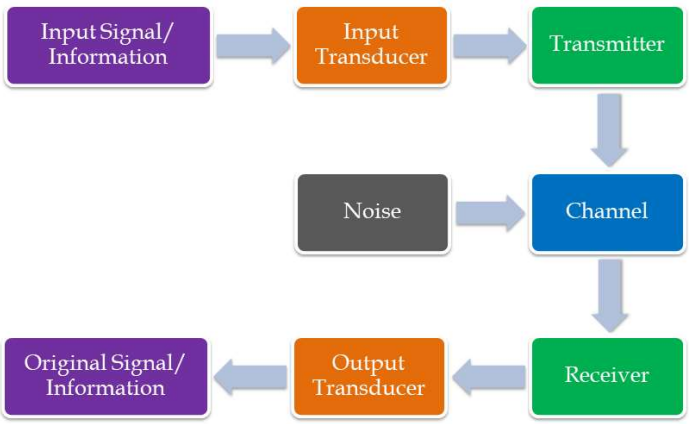 Input Transducer: • Coverts message (voice, video, music or text) into its electrical equivalent (Baseband Signal). Transmitter: • Signal processing – Amplification, Modulation, Encoding, etc. • Transmitting antenna at output in case of wireless communication Channel: • Medium through which signal is transmitted from Tx. to Rx. • Wired (Guided): Twisted pair cable/ Coaxial cable/ Optical fiber • Wireless (Unguided): Radio wave/ Infrared/ Microwave communication Noise: • Any unwanted signal which degrades quality of desired information signal Receiver: • Signal processing – Amplification, Demodulation, Decoding, etc.		CO2	L2

- Receiving antenna at input in case of wireless communication

Output Transducer:
Coverts Baseband Signal (electrical equivalent) into its original form (voice, video, music or text)

OR

d) Compare wired and wireless media. (5 marks)

Solution:

Parameter	**Wired Communication**	**Wireless Communication**
Medium	Physical wire (twisted pair cable, coaxial cable, optical fiber)	Air (radio waves, microwaves, infrared)
Installation	Difficult & requires more time	Easy & requires less time
Distance covered	Less	More
Areas covered	Difficult in hilly & forest area	Easily covers hilly& forest area
Mobility	Limited	High
Environmental interference	Less	More

e) Explain the amplitude modulation with waveforms. If modulating signal frequency is 10 kHz and carrier signal frequency is 500 kHz then calculate the bandwidth of resulting AM signal. (6 marks)

Solution:

In amplitude modulation, the amplitude of high frequency carrier signal is changed in accordance with the instantaneous amplitude of low frequency modulating signal. There is no change in frequency and phase of carrier signal.

CO2 L2

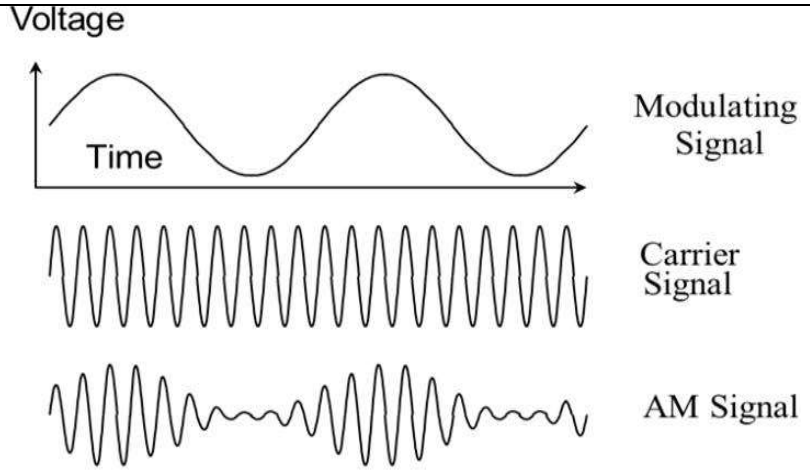

Bandwidth Calculation:

$$BW = 2f_m$$
$$BW = 2 * 10 \text{ k}$$
$$BW = 20 \text{ kHz}$$

OR

f) Explain the need of modulation. Calculate the minimum height of a monopole antenna required to transmit 12 MHz signal.

(6 marks)

Solution:

Need of Modulation:

Reduction in Antenna Height:

- Antenna dimensions are always inversely proportional to frequency of operation.
- Simplest antenna is monopole antenna whose height λ/4.
- Monopole antenna height h = λ/4 = c/4*f

Avoids Mixing of Signals:

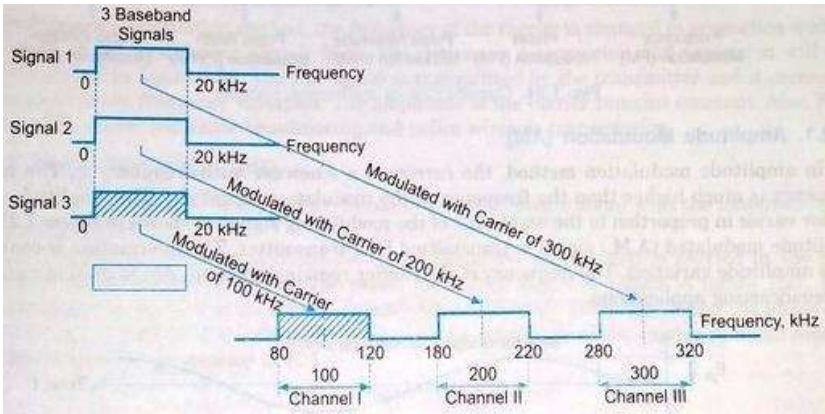

Multiplexing is Possible:

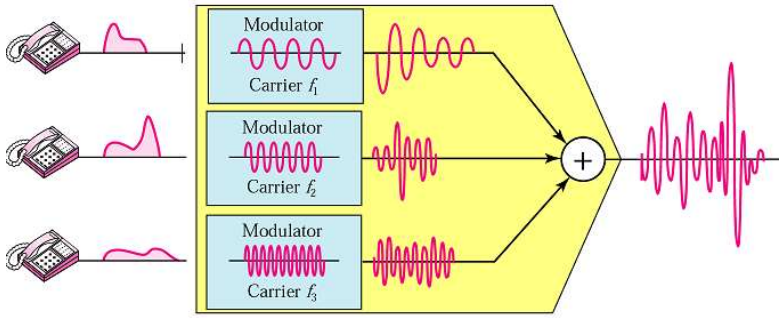

Allows Long Distance Communication:

- With increase in frequency, the energy of signal also increases. (i.e. E= h*f)
- Hence signal can travel over long distance.

Improves Quality of Communication:

- Modulation avoids mixing of signals, it allows multiplexing of signals and increases energy level of signal. Hence it helps to improve the quality of communication.

Height of a monopole antenna to transmit 12 MHz signal:

$$h = \frac{\lambda}{4} = \frac{C}{4f} = \frac{3 * 10^8}{4 * 12 * 10^6} = 6.25\ m$$